EXAMINED BY :	EMERGING DISPLAY TECHNOLOGIES CORPORATION	FILE NO . CAS-50716
		ISSUE : NOV.13,2003
APPROVED BY:		TOTAL PAGE : 10
		VERSION : 7

CUSTOMER ACCEPTANCE SPECIFICATIONS

MODEL NO . :

E W 5 0 3 6 7 N C W

FOR MESSRS :

_____

CUSTOMER'S APPROVAL

DATE :

_____

BY :

_____

RECORDS OF REVISION

DOC. FIRST ISSUE

JUN.19,2003

DATE	REVISED PAGE NO.	SUMMARY

JUN.26,2003 — Page 2

3.1 ELECTRICAL ABSOLUTE MAXIMUM RATINGS

PARAMETER	SYMBOL	MIN.	MAX.	UNIT	REMARK
POWER SUPPLY FOR LOGIC	VDD – VSS	0	6.0	V	
POWER SUPPLY FOR LCD DRIVING	VDD – VEE	0	27.0	V	

↓

PARAMETER	SYMBOL	MIN.	MAX.	UNIT	REMARK
POWER SUPPLY FOR LOGIC	VDD – VSS	0	6.0	V	
POWER SUPPLY FOR LCD DRIVING	VDD – VEE	0	30.0	V	

Page 3

4. ELECTRICAL CHARACTERISTICS

PARAMETER	SYMBOL	CONDITION	MIN.	TYP.	MAX.	UNIT
POWER SUPPLY VOLTAGE FOR LOGIC	VDD – VSS	—	4.75	5.0	5.25	V

↓

PARAMETER	SYMBOL	CONDITION	MIN.	TYP.	MAX.	UNIT
POWER SUPPLY VOLTAGE FOR LOGIC	VDD – VSS	—	4.5	5.0	5.5	V

JUL.02,2003 — Page 1

2. MECHANICAL SPECIFICATIONS
(3)EFFECTIVE AREA -------- 120.0W*90.0Hmm →
(3)EFFECTIVE AREA -------- 121.0W*91.6Hmm

Page 2

3.2 ENVIRONMENTAL ABSOLUTE MAXIMUM RATINGS

ITEM	OPERATING		STORAGE		REMARK
	MIN.	MAX.	MIN.	MAX.	
AMBIENT TEMPERATURE	0 °C	50 °C	-20 °C	60 °C	NOTE (2),(3),(4)
HUMIDITY	—	85 % RH	—	85 % RH	WITHOUT CONDENSATION

↓

ITEM	OPERATING		STORAGE		REMARK
	MIN.	MAX.	MIN.	MAX.	
AMBIENT TEMPERATURE	0 °C	50 °C	-20 °C	70 °C	NOTE (2),(3),(4)
HUMIDITY	—	90 % RH	—	90 % RH	WITHOUT CONDENSATION NOTE (5)

NOTE(5) : WHEN TEMPERATURE RISES TO 40 DEGREE C, HUMIDITY WILL BE AT 90 PERCENT.

Page 7

7. OUTLINE DIMENSION
REVISED THE ENTIRE PAGE

AUG.06,2003 — Page 2

3.2 ENVIRONMENTAL ABSOLUTE MAXIMUM RATINGS

ITEM	OPERATING		STORAGE		REMARK
	MIN.	MAX.	MIN.	MAX.	
VIBRATION	—	2.45 m/s² (0.25G)	—	11.76 m/s² (1.2G)	10~100 HZ XYZ DIRECTIONS 1 Hr. EACH

↓

ITEM	OPERATING		STORAGE		REMARK
	MIN.	MAX.	MIN.	MAX.	
VIBRATION	—	2.45 m/s² (1G)	—	11.76 m/s² (1.2G)	10~100 HZ XYZ DIRECTIONS 1 Hr. EACH

Page 3

4. ELECTRICAL CHARACTERISTICS

PARAMETER	SYMBOL	CONDITION	MIN.	TYP.	MAX.	UNIT
POWER SUPPLY VOLTAGE FOR LCD DRIVE	VEE – VSS	—	-21.5	-22.0	-22.5	V
RECOMMENDED LCD DRIVING VOLTAGE	VDD – V0 ∅ = 10°, θ = 0° DUTY =1/240	Ta = 0 °C	(23)	(23.5)	(24)	V
		Ta = 25 °C	22.0	23.0	24.0	V
		Ta = 50 °C	(22)	(22.5)	(23)	V
CLOCK OSCILLATION FREQUENCY	f FLM	—	70	75	80	HZ

PARAMETER		SYMBOL	CONDITION	MIN.	TYP.	MAX.	UNIT
POWER SUPPLY VOLTAGE FOR LCD DRIVE		VEE – VSS	—	-23	-24	-25	V
RECOMMENDED LCD DRIVING VOLTAGE	NOTE(3)	VDD – V0 ∅ = 10°, θ = 0° DUTY =1/240	Ta = 0 °C	(23)	(23.5)	(24)	V
			Ta = 25 °C	22.0	23.0	24.0	V
			Ta = 50 °C	(22)	(22.5)	(23)	V
	NOTE(4)		Ta = 0 °C	—	(24.8)	—	V
			Ta = 25 °C	—	(24.8)	—	V
			Ta = 50 °C	—	(24.8)	—	V
CLOCK OSCILLATION FREQUENCY		f FLM	—	65	70	75	HZ

NOTE(3) : NO TEMPERATURE COMPENSATION
NOTE(4) : TEMPERATURE COMPENSATION

Page 7

7. OUTLINE DIMENSION
REVISED THE ENTIRE PAGE

RECORDS OF REVISION

DOC. FIRST ISSUE

JUN.19,2003

DATE	REVISED PAGE NO.	SUMMARY
AUG.06,2003	10	11.1 POWER SUPPLY FOR LCM

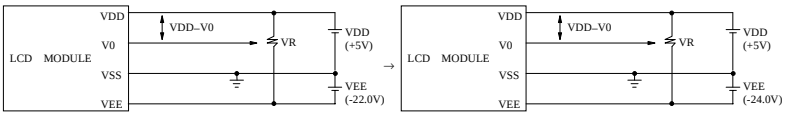

AUG.15,2003	2	3.2 ENVIRONMENTAL ABSOLUTE MAXIMUM RATINGS

ITEM	OPERATING MIN.	OPERATING MAX.	STORAGE MIN.	STORAGE MAX.	REMARK
VIBRATION	—	2.45 m/s² (1G)	—	11.76 m/s² (1.2G)	10~100 HZ XYZ DIRECTIONS 1 Hr. EACH

↓

ITEM	OPERATING MIN.	OPERATING MAX.	STORAGE MIN.	STORAGE MAX.	REMARK
VIBRATION	—	9.8 m/s² (1G)	—	11.76 m/s² (1.2G)	10~100 HZ XYZ DIRECTIONS 1 Hr. EACH

	3	4. ELECTRICAL CHARACTERISTICS

PARAMETER		SYMBOL	CONDITION	MIN.	TYP.	MAX.	UNIT
RECOMMENDED LCD DRIVING VOLTAGE	NOTE(3)	VDD – V0 ∅ = 10°,θ = 0° DUTY =1/240	Ta = 0 °C	(23)	(23.5)	(24)	V
			Ta = 25 °C	22.0	23.0	24.0	V
			Ta = 50 °C	(22)	(22.5)	(23)	V
	NOTE(4)		Ta = 0 °C	—	(24.8)	—	V
			Ta = 25 °C	—	(24.8)	—	V
			Ta = 50 °C	—	(24.8)	—	V

NOTE (4): TEMPERATURE COMPENSATION

↓

PARAMETER		SYMBOL	CONDITION	MIN.	TYP.	MAX.	UNIT
RECOMMENDED LCD DRIVING VOLTAGE	NOTE(3)	VDD – V0 ∅ = 10°,θ = 0° DUTY =1/240	Ta = 0 °C	(23)	(23.5)	(24)	V
			Ta = 25 °C	22.0	23.0	24.0	V
			Ta = 50 °C	(22)	(22.5)	(23)	V

	7	7. OUTLINE DIMENSION EFFECTIVE DISPALY AREA → EFFECTIVE DISPLAY AREA
NOV.06,2003	3	4. ELECTRICAL CHARACTERISTICS

PARAMETER		SYMBOL	CONDITION	MIN.	TYP.	MAX.	UNIT
POWER SUPPLY CURRENT FOR LOGIC NOTE (2)		IDD	VDD – VSS = 5.0 V VDD – VEE = 22.0 V	—	3.0	4.5	mA
POWER SUPPLY CURRENT FOR LCD DRIVE NOTE (2)		IEE	VDD – VSS = 5.0 V VDD – VEE = 22.0 V	—	2.8	4.0	mA
RECOMMENDED LCD DRIVING VOLTAGE	NOTE(3)	VDD – V0 ∅ = 10°,θ = 0° DUTY =1/240	Ta = 0 °C	(23)	(23.5)	(24)	V
			Ta = 25 °C	22.0	23.0	24.0	V
			Ta = 50 °C	(22)	(22.5)	(23)	V

↓

PARAMETER		SYMBOL	CONDITION	MIN.	TYP.	MAX.	UNIT
POWER SUPPLY CURRENT FOR LOGIC NOTE (2)		IDD	VDD – VSS = 5.0 V VDD – VEE = 22.0 V	—	10	12	mA
POWER SUPPLY CURRENT FOR LCD DRIVE NOTE (2)		IEE	VDD – VSS = 5.0 V VDD – VEE = 22.0 V	—	5	7	mA
RECOMMENDED LCD DRIVING VOLTAGE	NOTE(3)	VDD – V0 ∅ = 10°,θ = 0° DUTY =1/240	Ta = 0 °C	NOTE (3)			V
			Ta = 25 °C				V
			Ta = 50 °C				V

CHANGE NOTE(3)

	6	6. OPTICAL CHARACTERISTICS ITEM : VIEWING AREA → VIEWING ANGLE
	7	7. OUTLINE DIMENSIONS REVISED THE ENTIRE PAGE

RECORDS OF REVISION

DOC. FIRST ISSUE JUN.19,2003

DATE	REVISED PAGE NO.	SUMMARY
NOV.13,2003	9	10. INTERFACE SIGNALS

PIN NO	SYMBOL	LEVEL	FUNCTION
1	VO	—	OPERATING GROUND

↓

PIN NO	SYMBOL	LEVEL	FUNCTION
1	VO	—	CONTROL FOR LCD DRIVE VOLTAGE

TABLE OF CONTENTS

NO.	ITEM	PAGE
1.	GENERAL SPECIFICATIONS	1
2.	MECHANICAL SPECIFICATIONS	1
3.	ABSOLUTE MAXIMUM RATINGS	2
4.	ELECTRICAL CHARACTERISTICS	3
5.	TIMING CHARACTERISTICS	4 , 5
6.	OPTICAL CHARACTERISTICS	6
7.	OUTLINE DIMENSIONS	7
8.	BLOCK DIAGRAM	8
9.	DETAIL DRAWING OF DOT MATRIX	9
10.	INTERFACE SIGNALS	9
11.	POWER SUPPLY	10

1. GENERAL SPECIFICATIONS

1.1 GENERAL SPECIFICATIONS
PLEASE REFER TO :

CUSTOMER ACCEPTANCE STANDARD SPECIFICATIONS :

EU-002A

1.2 THIS INDIVIDUAL SPECIFICATION IS PRIOR TO GENERAL SPECIFICATIONS.

2. MECHANICAL SPECIFICATIONS

(1)	NUMBER OF DOTS	320W * 240H DOTS
(2)	MODULE SIZE	157.8W * 121.6H * 11.5D(max.) mm (EXCEPT FFC CABLE)
(3)	EFFECTIVE AREA	121.0W * 91.6H mm
(4)	ACTIVE AREA	115.17W * 86.37H mm
(5)	DOT SIZE	0.33W * 0.33H mm
(6)	DOT PITCH	0.36W * 0.36H mm
(7)	LCD TYPE	FSTN,NEGATIVE,BLACK/WHITE TRANSMISSIVE,GLARE POLARIZER
(8)	DRIVING METHOD	1/240 DUTY MULTIPLEX DRIVE
(9)	BACKLIGHT	CCFL

3. ABSOLUTE MAXIMUM RATINGS

3.1 ELECTRICAL ABSOLUTE MAXIMUM RATINGS.

PARAMETER	SYMBOL	MIN.	MAX.	UNIT	REMARK
POWER SUPPLY FOR LOGIC	VDD – VSS	0	6.0	V	
POWER SUPPLY FOR LCD DRIVING	VDD – VEE	0	30.0	V	
INPUT VOLTAGE	VI	VSS	VDD	V	
STATIC ELECTRICITY	—	—	100	V	NOTE (1)

NOTE (1) : TEST METHOD AND CONDITIONS :
AFTER CHARGING UP 200 PF CAPACITOR BY STATED VOLTAGE, THE CAPACITOR IS CONNECTED WITH INTERFACE PINS OF THE MODULE.

3.2 ENVIRONMENTAL ABSOLUTE MAXIMUM RATINGS.

ITEM	OPERATING		STORAGE		REMARK
	MIN.	MAX.	MIN.	MAX.	
AMBIENT TEMPERATURE	0 °C	50 °C	-20 °C	70 °C	NOTE (2),(3),(4)
HUMIDITY	—	90 % RH	—	90 % RH	WITHOUT CONDENSATION NOTE (5)
VIBRATION	—	9.8 m/s² (1G)	—	11.76 m/s² (1.2G)	10~100 HZ XYZ DIRECTIONS 1 Hr. EACH
SHOCK	—	29.4 m/s² (3G)	—	490.0 m/s² (50G)	10 mSECONDS XYZ DIRECTIONS 1 TIME EACH
CORROSIVE GAS	NOT ACCEPTABLE		NOT ACCEPTABLE		

NOTE (2) : Ta AT -20 °C : 48HR MAX.
60 °C : 168HR MAX.
NOTE (3) : BACKGROUND COLOR CHANGES SLIGHTLY DEPENDING ON AMBIENT TEMPERATURE THIS PHENOMENON IS REVERSIBLE.
NOTE (4) : CCFL BACKLIGHT IS NOT AVAILABLE TO FUNCTION BELOW 0 °C
NOTE (5) : WHEN TEMPERATURE RISES TO 40 DEGREE C, HUMIDITY WILL BE AT 90 PERCENT.

4. ELECTRICAL CHARACTERISTICS

Ta = 25 °C VDD = 5.0 V

PARAMETER		SYMBOL	CONDITION	MIN.	TYP.	MAX.	UNIT
POWER SUPPLY VOLTAGE FOR LOGIC		VDD – VSS	—	4.5	5.0	5.5	V
POWER SUPPLY VOLTAGE FOR LCD DRIVE		VEE – VSS	—	-23	-24	-25	V
INPUT VOLTAGE NOTE (1)		VIH	H LEVEL	0.8*VDD	—	—	V
		VIL	L LEVEL	—	—	0.2*VDD	V
OUTPUT VOLTAGE NOTE (1)		VOH	H LEVEL	2.4	—	—	V
		VOL	L LEVEL	—	—	VSS+0.4	V
POWER SUPPLY CURRENT FOR LOGIC NOTE (2)		IDD	VDD – VSS = 5.0 V VDD – VEE = 22.0 V	—	10	12	mA
POWER SUPPLY CURRENT FOR LCD DRIVE NOTE (2)		IEE	VDD – VSS = 5.0 V VDD – VEE = 22.0 V	—	5	7	mA
RECOMMENDED LCD DRIVING VOLTAGE	NOTE(3)	VDD – V0	Ta = 0 °C	NOTE (3)			V
		∅ = 10°, θ = 0°	Ta = 25 °C				V
		DUTY =1/240	Ta = 50 °C				V
CLOCK OSCILLATION FREQUENCY		f FLM	—	65	70	75	HZ
POWER SUPPLY FOR CCFL	VOLTAGE	VCCFL	—	—	300	—	Vrms
	FREQUENCY	f CCFL	—	—	30K	—	HZ
	CURRENT	IL	—	—	5	—	mA
	LIFE TIME	L	IL = 5.0mA	25000	50000	—	Hrs

NOTE (1): APPLIED TO TERMINALS M, FLM, CL1, CL2, D0~D3, $\overline{\text{DISPOFF}}$.
NOTE (2): THE DISPLAY PATTERN IS ALL "OFF"/ "ON".
NOTE (3): TEMPERATURE COMPENSATION

J9	J10	TEMPERATURE	MIN.	TYP.	MAX.	UNIT
L	L	Ta = 0°C	24.0	24.5	25.0	V
		Ta = 25°C	22.8	23.3	23.8	V
		Ta = 50°C	22.1	22.6	23.1	V
L	H	Ta = 0°C	24.8	25.3	25.8	V
		Ta = 25°C	23.2	23.7	24.2	V
		Ta = 50°C	21.7	22.2	22.7	V
H	L	Ta = 0°C	23.6	24.1	24.6	V
		Ta = 25°C	23.1	23.6	24.1	V
		Ta = 50°C	22.6	23.1	23.6	V
H	H	Ta = 0°C	24.3	24.8	25.3	V
		Ta = 25°C	24.3	24.8	25.3	V
		Ta = 50°C	24.3	24.8	25.3	V

5. TIMING CHARACTERISTICS

5.1 INTERFACE TIMING

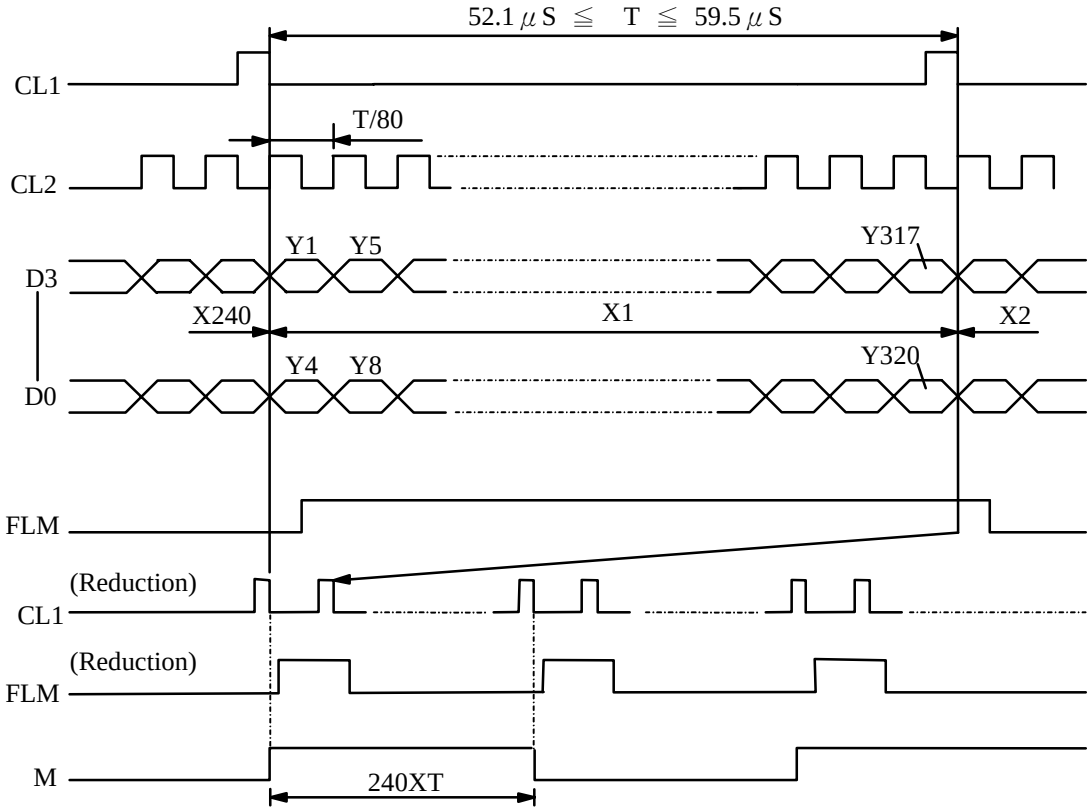

5.2 SWITCHING CHARACTERISTICS

PARAMETER	SYMBOL	MIN.	TYP.	MAX.	UNIT
Frequency of maximum clock	fcp	—	—	8	MHZ
CL1 , CL2 , pulse width	tw	45	—	—	ns
Rise , fall time	tr,tf	—	—	15	ns
Data setup time	t_{DSU}	20	—	—	ns
Data hold time	t_{DHD}	20	—	—	ns
CL1 setup time	t_{LSU}	80	—	—	ns
CL1 → CL2 time	t_{LC}	80	—	—	ns
FLM setup time	tsetup	100	—	—	ns
FLM hold time	thold	100	—	—	ns
M delay time	t_{DF}	—	—	300	ns

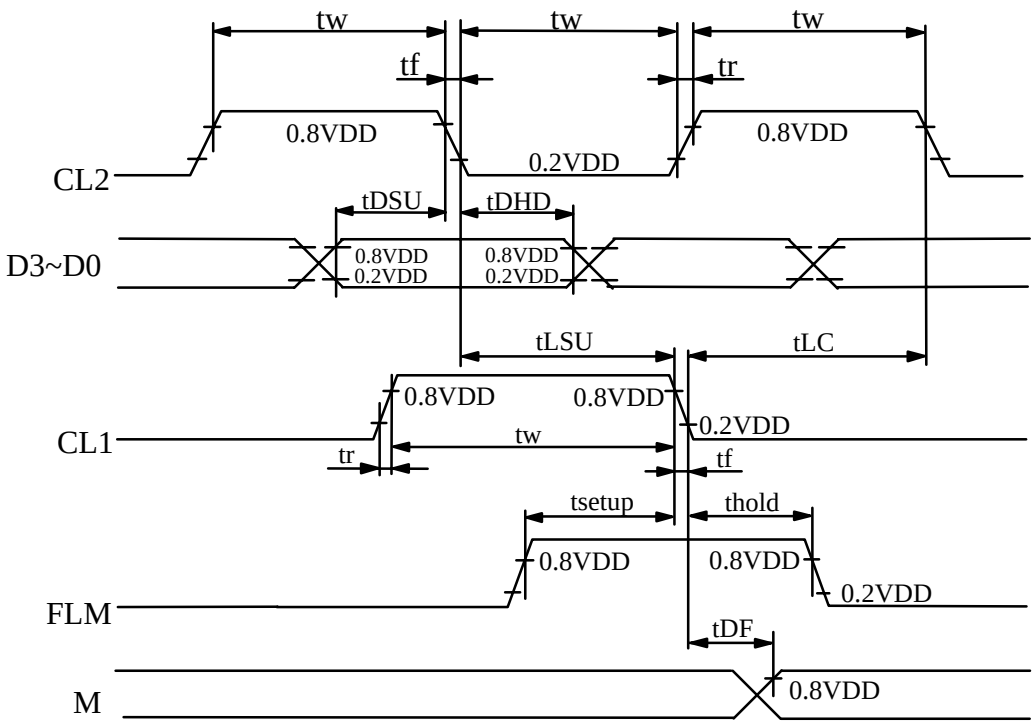

6. OPTICAL CHARACTERISTICS

Ta = 25 °C VDD = 5.0 V

ITEM	SYMBOL	CONDITION		MIN.	TYP.	MAX.	UNIT	NOTE
VIEWING ANGLE	∅2 –∅1	K ≥ 2.0		—	50	—	deg.	1
CONTRAST RATIO	K	∅ = 10°, θ = 0°		—	20	—	—	1
RESPONSE TIME	tr (rise)	∅=10° θ = 0°	Ta = 0 °C	—	(1500)	—	ms	1
			Ta = 25 °C	—	228	—		
			Ta = 50 °C	—	(200)	—		
	tf (fall)		Ta = 0 °C	—	(800)	—		
			Ta = 25 °C	—	191	—		
			Ta = 50 °C	—	(200)	—		
BRIGHTNESS OF MODULE	B	—		165	180	—	cd / m²	2
BRIGHTNESS OF BACKLIGHT	B	—		1100	1200	—	cd / m²	2
RISE TIME OF BACKLIGHT	TC	—		—	5	—	MINUTE	
BRIGHTNESS UNIFORMITY	—	—		—	—	20	%	3 , 4

NOTE (1) : PLEASE REFER TO :
CUSTOMER ACCEPTANCE STANDARD SPECIFICATIONS. (EU - 001A)
NOTE (2) : POLARIZER MODE : TRANSMISSIVE
NOTE (3) : MEASUREMENT OF THE FOLLOWING 9 PLACES ON THE DISPLAY.
DEFINITION OF THE BRIGHTNESS TOLERANCE .

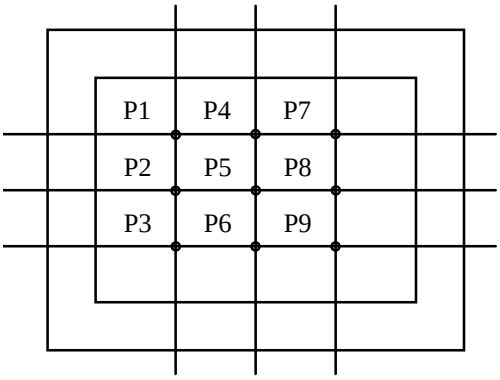

NOTE (4) : BRIGHTNESS UNIFORMITY IS DEFINED AS FOLLOWING

$$\sum X = \left[\frac{\left| \text{(MAXIMUN BRIGHTNESS OR MINIMUN BRIGHTESS)-AVERAGE BRIGHTNESS} \right|}{\text{AVERAGE BRIGHTNESS}} \right] \times 100\%$$

7. OUTLINE DIMENSIONS

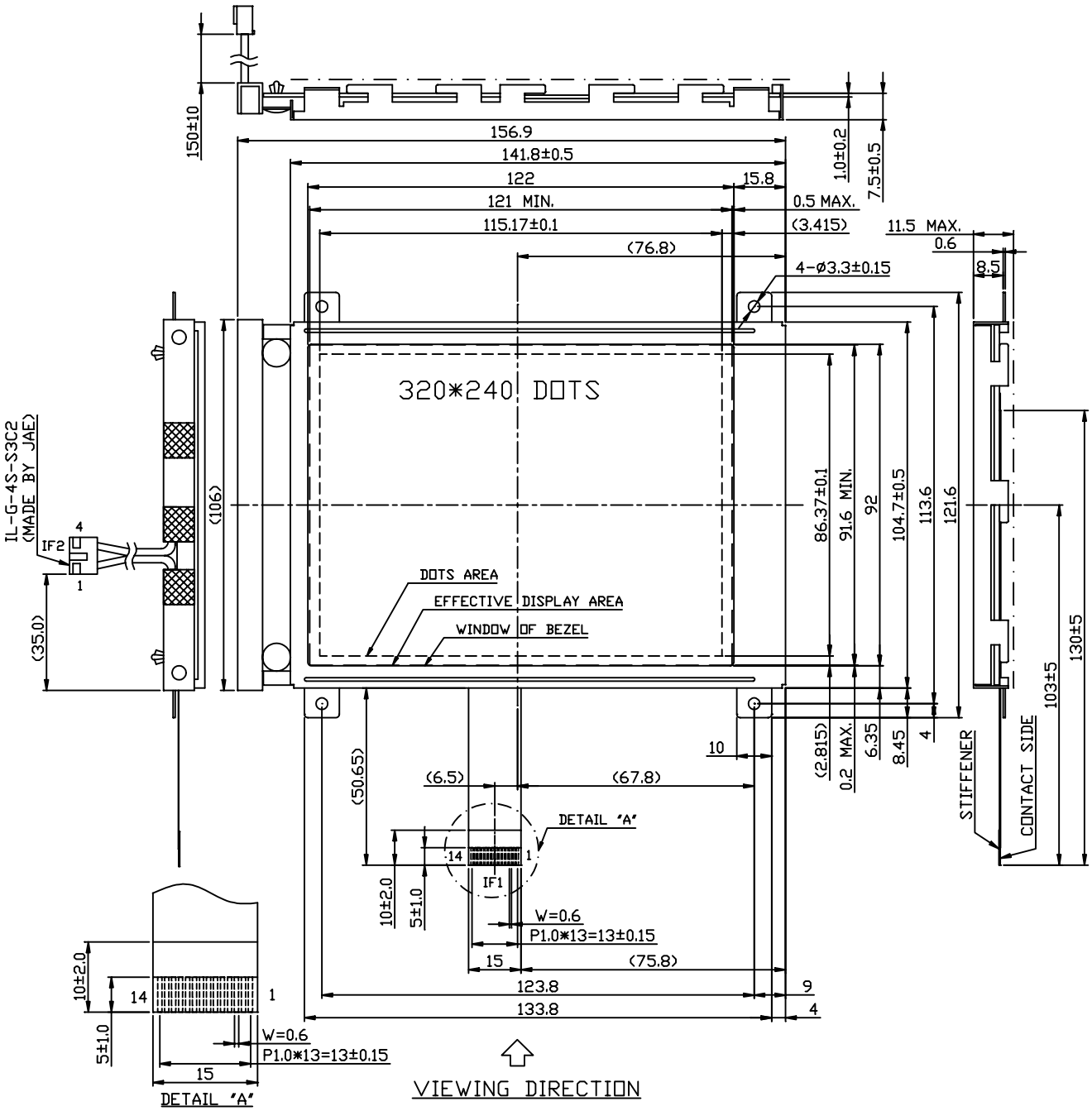

UNIT : mm
SCALE : NTS
NOT SPECIFIED TOLERANCE IS ± 0.5

8. BLOCK DIAGRAM

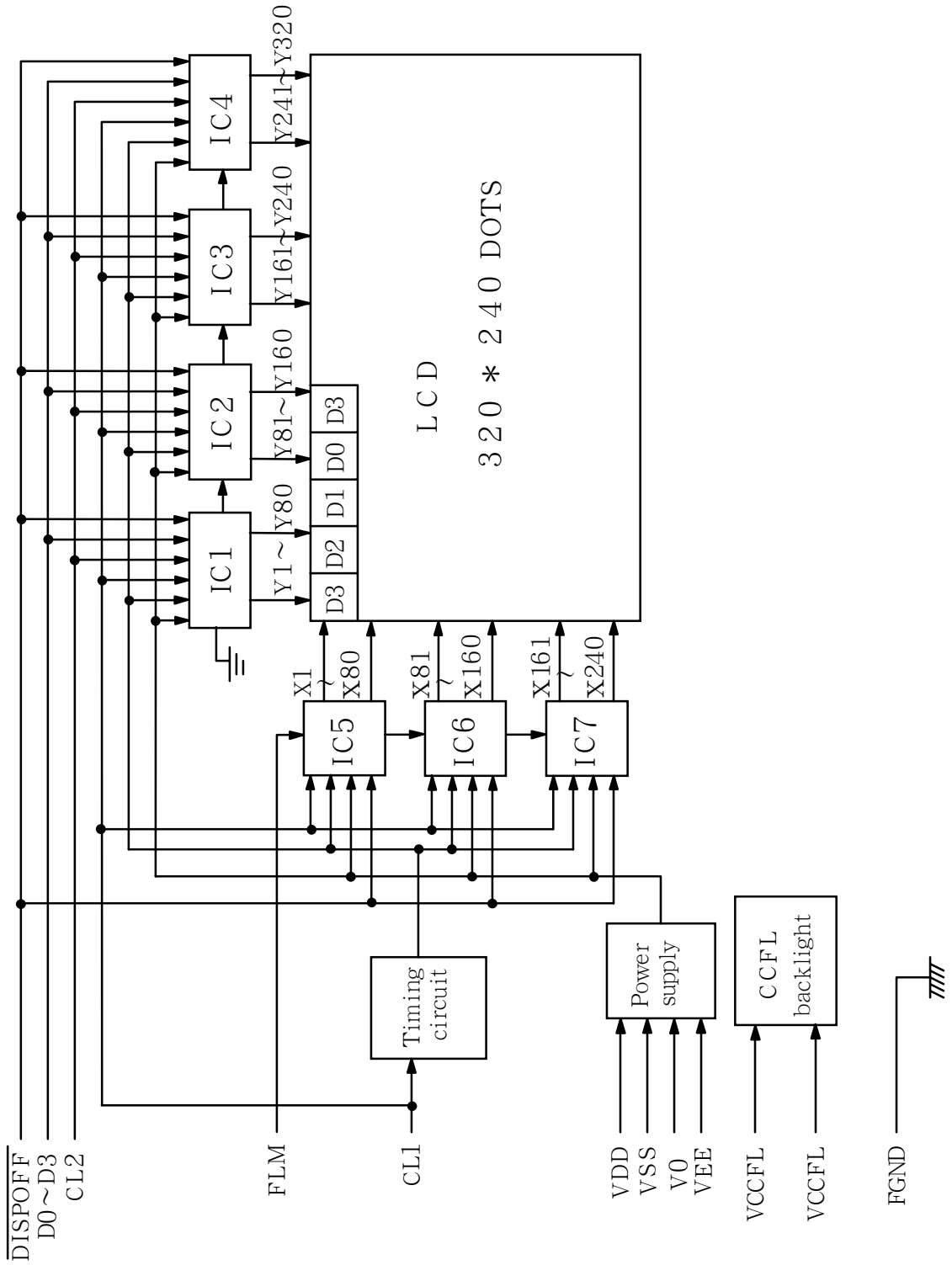

9. DETAIL DRAWING OF DOT MATRIX

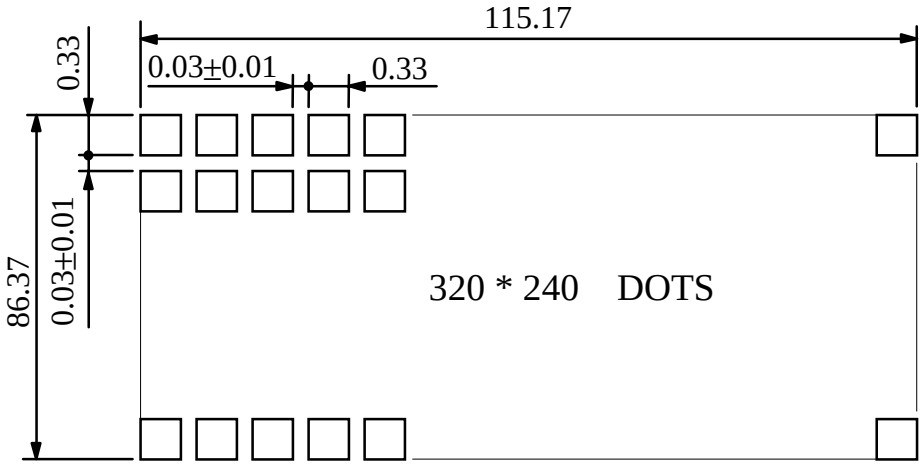

UNIT : mm
SCALE : NTS
NOT SPECIFIED TOLERANCE IS ± 0.1

10. INTERFACE SIGNALS

IF1：

PIN NO	SYMBOL	LEVEL	FUNCTION
1	VO	—	CONTROL FOR LCD DRIVE VOLTAGE
2	VEE	—	POWER SUPPLY FOR LCD DRIVING
3	D3	H / L	DISPLAY DATA
4	D2	H / L	
5	D1	H / L	
6	D0	H / L	
7	NC	—	NO CONNECTION
8	VSS	—	GROUND
9	VDD	—	POWER SUPPLY FOR LOGIC CIRCUIT
10	CL2	H → L	DISPLAY DATA SHIFT
11	CL1	H → L	DISPLAY DATA LATCH
12	FLM	H	THE FLM SIGNAL INDICATING THE BEGINNING OF EACH DISPLAY CYCLE
13	$\overline{\text{DISPOFF}}$	H / L	H：DISPLAY ON , L：DISPLAY OFF
14	FGND	—	FRONT PANEL GROUND

IF2：

INTERFACE	PIN	SINGAL	VEVEL	FUNCTION
CCFL	1	VCCFL	—	POWER SUPPLY FOR CCFL DRIVING
	2~3	NC	—	NO CONNECTION
	4	VCCFL	—	POWER SUPPLY FOR CCFL DRIVING

11. POWER SUPPLY

11.1 POWER SUPPLY FOR LCM

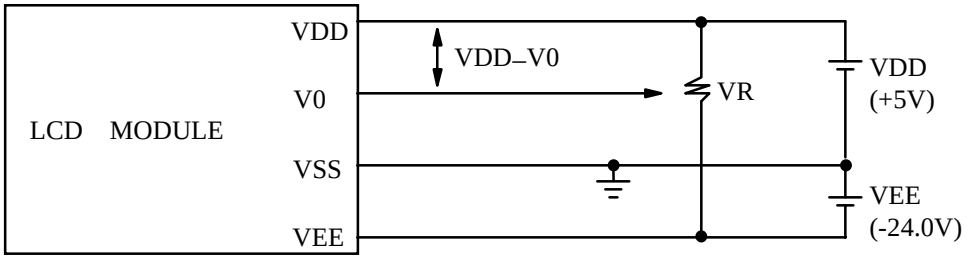

VDD – V0 : LCD DRIVING VOLTAGE
VR : 20KΩ

11.2 POWER SUPPLY FOR CCFL BACK - LIGHT

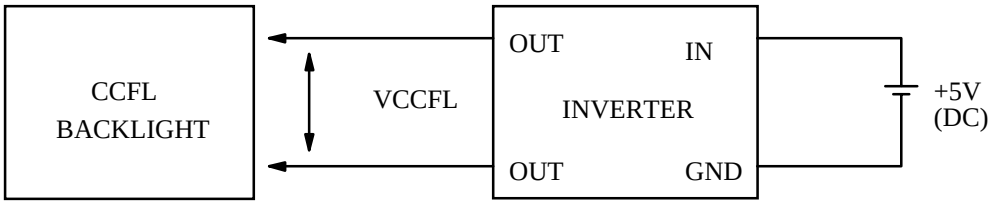

RECOMMENDED INVERTER : IA-EM02A1
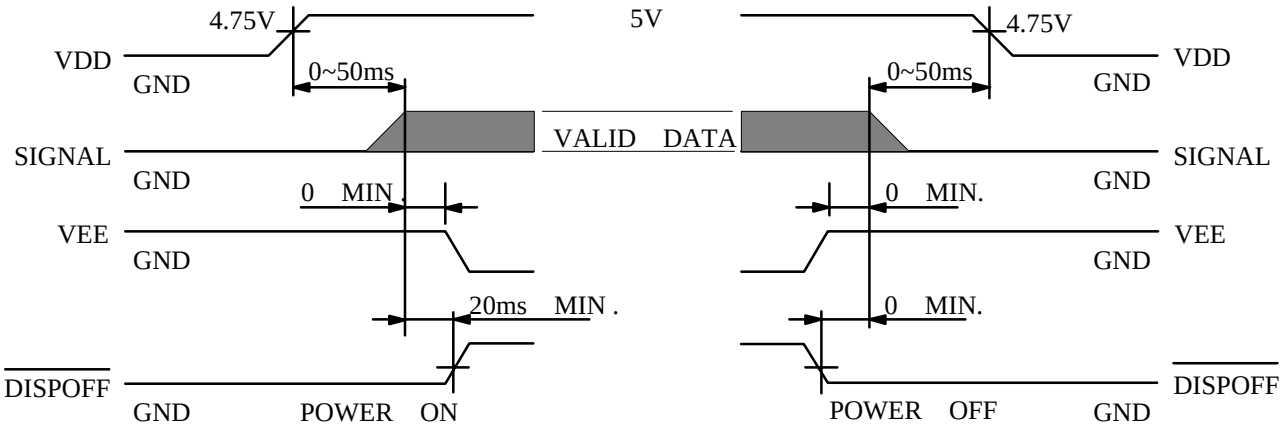
11.3 TIMING OF POWER SUPPLY AND INTERFACE SIGNAL